ENGINEERING HONORS PROGRAM
UNIVERSITY OF MICHIGAN

IPAVE: Telepresence robot

Students: Wuyang Du, Arushi Debi Narayanan (Honors Capstone), Andrea Sofia Vargas, Justin Alexander Wong
Advisor: Professor Shai Revzen Sponsor: Linda Williams (Owner of IPAVE)

Introduction

We were tasked with prototyping a functional telepresence (a robot that a person could video call to and control). The goal is to create a design that replaced the sponsor's old telepresence robots and gave them proprietorship so they can produce their own fleet, entirely manufactured in the U.S. Additionally, we looked to make a design that was cheap to make and easier to use by the company's main demographic.

Requirements

- Parts used should be readily available in the US
- Prototype should be transportable in a jeep
- Robot mobility requirements:
  - driving over a door threshold (bump)
  - turning on one axis
  - driving at 2mph
- Software requirements:
  - Flexibilty over multiple devices and video calling softwares
  - control signal response in less than 0.7 seconds
- Prototype can pass a operation time of 3 hours with use of the motors for 45 minutes

Software

- The robot can be remotely controlled from a person that calls into it with a feedback response less than 0.7 seconds after sending a command
- The user can call in from a phone, tablet, or computer on various video conferencing platforms (zoom, google meet, skype) passing the required flexibility in communication

Full Robot Design

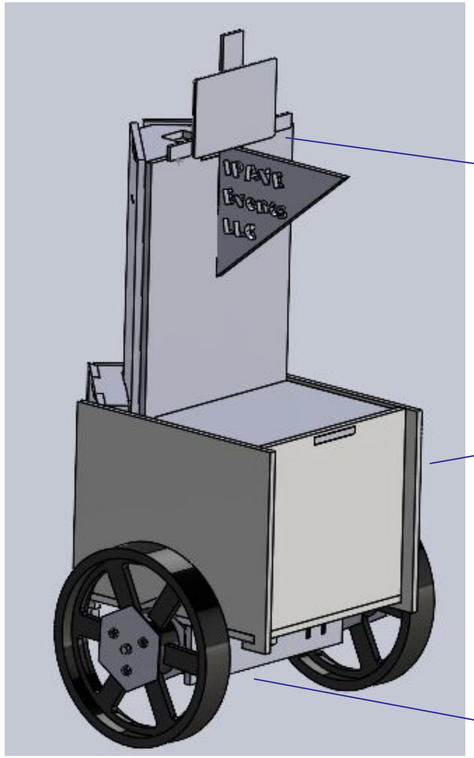

- robot can be disassembled to fit inside a vehicle
- parts slot into one another to make easy assembly and disassembly

Components

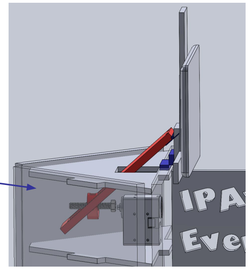

Tablet mount

- worm drive to tilt the tablet without overworking the motor
- Tablet can tilt 30° in either direction passing mobility tests

Components:

- PLA 3d printed parts
- various bolts and nuts
- door hinges
- tablet bracket
- motor

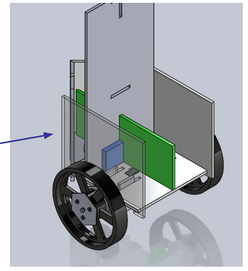

Neck and Chassis

- Sectioned base to support battery and other components
- back heavy to avoid tilting and to pass mobility tests over a bump.

Components:

- ¼” foam-core boards
- housing:
  - battery
  - 36v to 12v converter
  - 12v to 5v converter
  - mini-pc

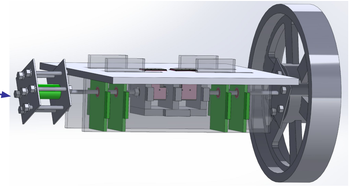

Drive Train

- two bearings on either side to offload vertical load on the motors

Components:

- ¼” foam-core boards
- 0.1” aluminum sheets
- ¼” abs sheets
- PLA 3d printed parts
- various bolts and nuts
- dynamixel motors
- wheels

Power distribution

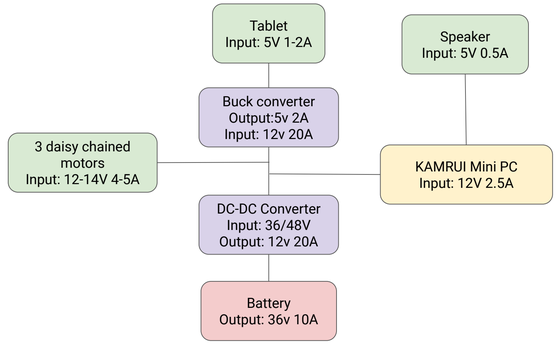

- Power distributed to allow for use of the robot for at least 3 hours with use of the motors for around 45 minutes

FUTURE WORK

Sponsor next steps:

- Sponsor has baseline product and supporting documentation that can be given to a manufacturer
- Can use newly designed product to support business model
- Coding rights to modify or add functionality

Future teamwork:

- Improvements to aesthetic presentation of the robot
- Can add manual height adjustability
- Can add robotic height adjustability
- Redesigning the drive train to support movement on rougher terrain such as grass or gravel