FastAnt: Gearbox Design

Andrea Vazquez Garcia (Honors Capstone)
Advisor: Professor Shai Revzen

ENGINEERING HONORS PROGRAM
UNIVERSITY OF MICHIGAN

Introduction

FastANT is a hexapod robot currently being designed by MuRoAM and BIRDs Lab. The goal is to create a faster version of BigANT, another one of the lab's robots, using T-MOTOR U8 100 U-Power Series motors. This will require the use of planetary gearboxes to gear down the motors to an appropriate speed for locomotion. This project focuses on creating a gearbox that can be fabricated in the lab while trying to minimize the time needed to make it and allowing for easy modification for future iterations or future projects in the lab.

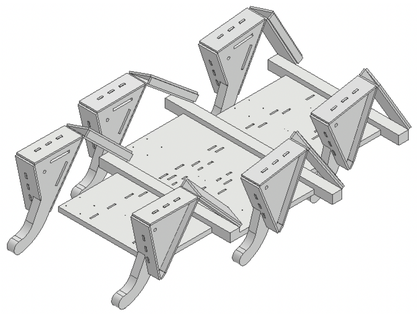

Figure 1: Original BigANT chassis

Design Requirements

Gearbox drives the existing FastANT leg:

- Output mates to FastANT's leg rotary link
- Provides speed reduction
- Supports all forces applied to the output

Provide support for T-motors:

- A single motor can be mounted to the assembly
- Adequate heat dissipation

Use of standard lab materials and manufacturing processes:

- Exclusive use of skateboard bearings
- Fasteners that can be found in the lab
- Parts may be 3D printed or laser cut

Parts should be easy to assemble, disassemble and replace

Laser Cut Gearbox Design

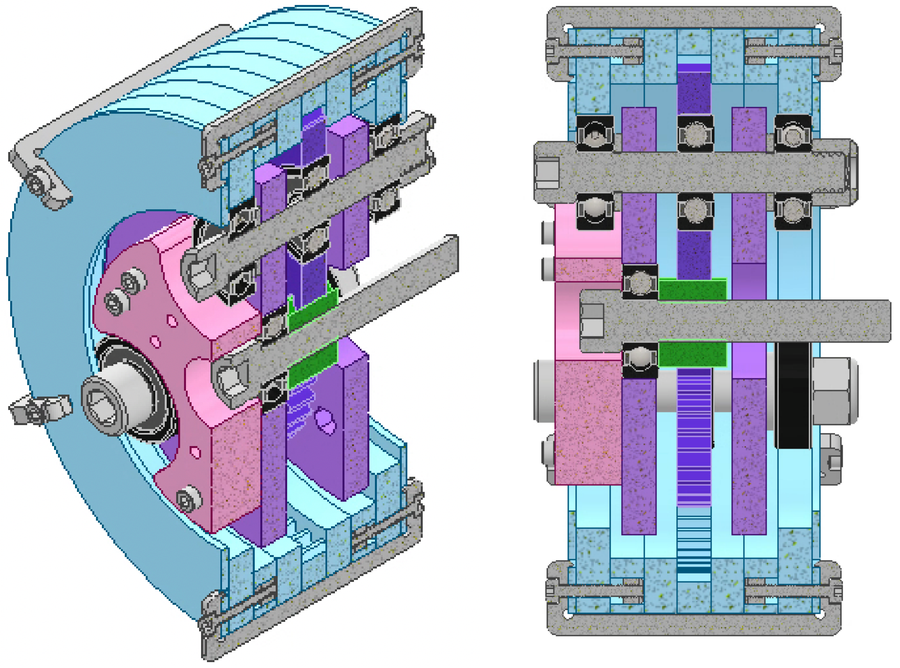

Figure 3: Section views of laser cut gearbox CAD

Design Timeline

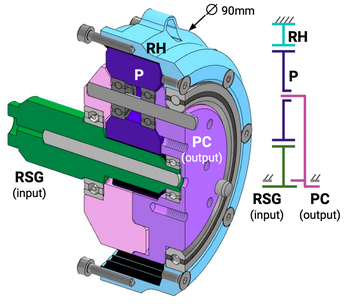

Figure 4: Original EMBiR lab's 3D printed gearbox

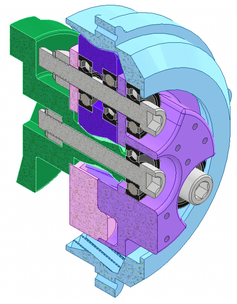

Figure 5: 3D printed gearbox with helical gears

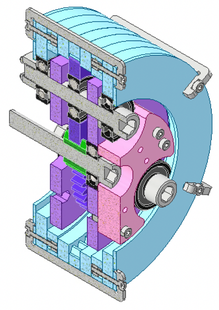

Figure 6: Laser cut gearbox

Main Component Description

Gears: the planetary gearbox consists of a ring gear, a sun gear, and three planet gears. These gears were designed to provide a 7.5:1 gear ratio. Friction from their rotation is reduced by ball bearings.
Carrier: connects the rotation of the planets to the output.
Output: connects the gearbox assembly to a leg's rotaty link.
Gearbox housing: made primarily out of 1/4" ABS, with 1/16" outer layers to hold carrier bearings in place.
Closing clips: designed to close the gearbox assembly using standard lab screws.

Future work

The first version of the laser cut gearbox is currently in the prototyping stage. Based on results from prototyping, future iterations of the laser cut gearbox might require a way to hold the planet gear's bearings in place if the press-fit is not enough.
The sun gear's connection is being designed. The final version will be tested along the gearbox to determined overall efficiency.

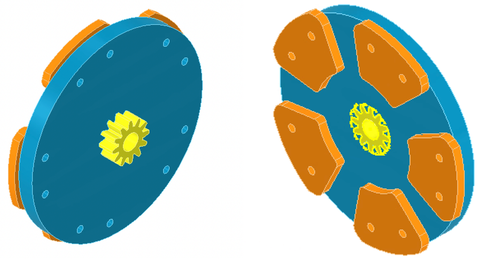

Figure 7: Current version of gearbox to motor connector

Specifics of the gearbox's mounting to FastANT's chassis and attachment to the leg also need to be determined and implemented.