Voltage Regulator and In-Rush Current Protection Power Board for FastANT Robot

Alexander Prather

Prototype Circuit

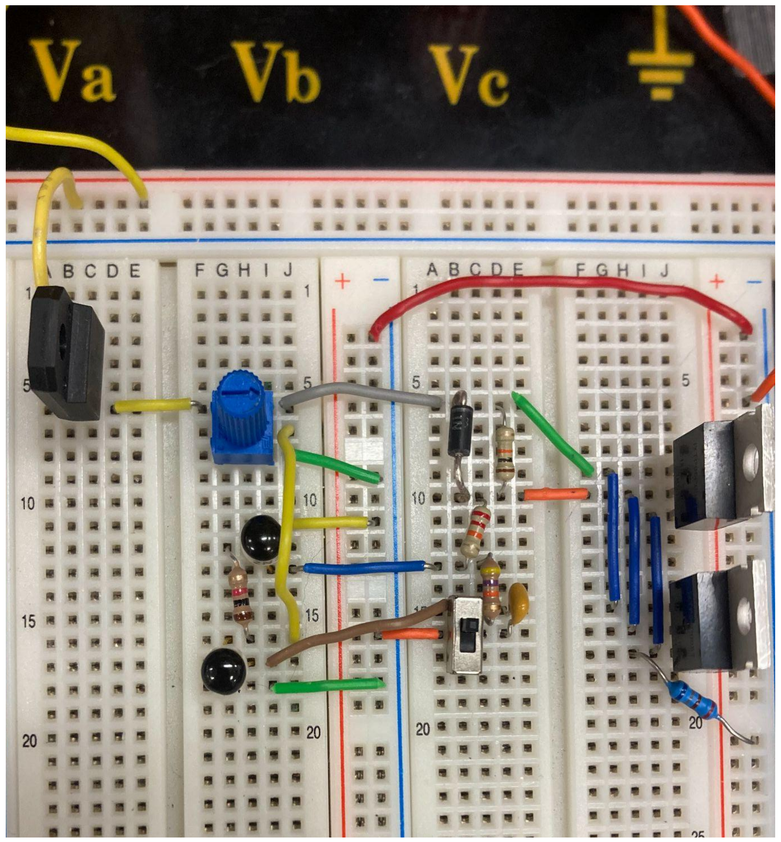

Current breadboard of Undervolting and Overvolting protection circuit.

Maximum Current Draw Calculation

4S-LIPO (Four Lithium Polymer Battery in Series)

Battery Range: 3.4-4.2V

* When LIPOs are at 3.6V, PFETs are in shut-off mode, cannot drop below 3.4V after 6 weeks:

T = 6 weeks **= 1008hrs**

V_{HIGH} = (4.2V)(4 batteries) = 16.8V

V_{LOW} = (3.4V)(4) = 13.6V

Highest capacity of battery: 1.2Ahr

Average Voltage: $V_{AVG} = (V_{HIGH}+V_{LOW})/2$

V_{AVG} **= 15.2 V**

Energy: **E** = (V_{AVG})(**Capacity**)

= (15.2)(1.2Ahr) = **18.24 Whr**

Power: **P** = E/t = (18.24Whr)/(1008hr)

P = 0.0181W

$I_{MAX} = P/V_{AVG}$ = (0.0181W)/(15.2V)

I_{MAX} = 1.19mA

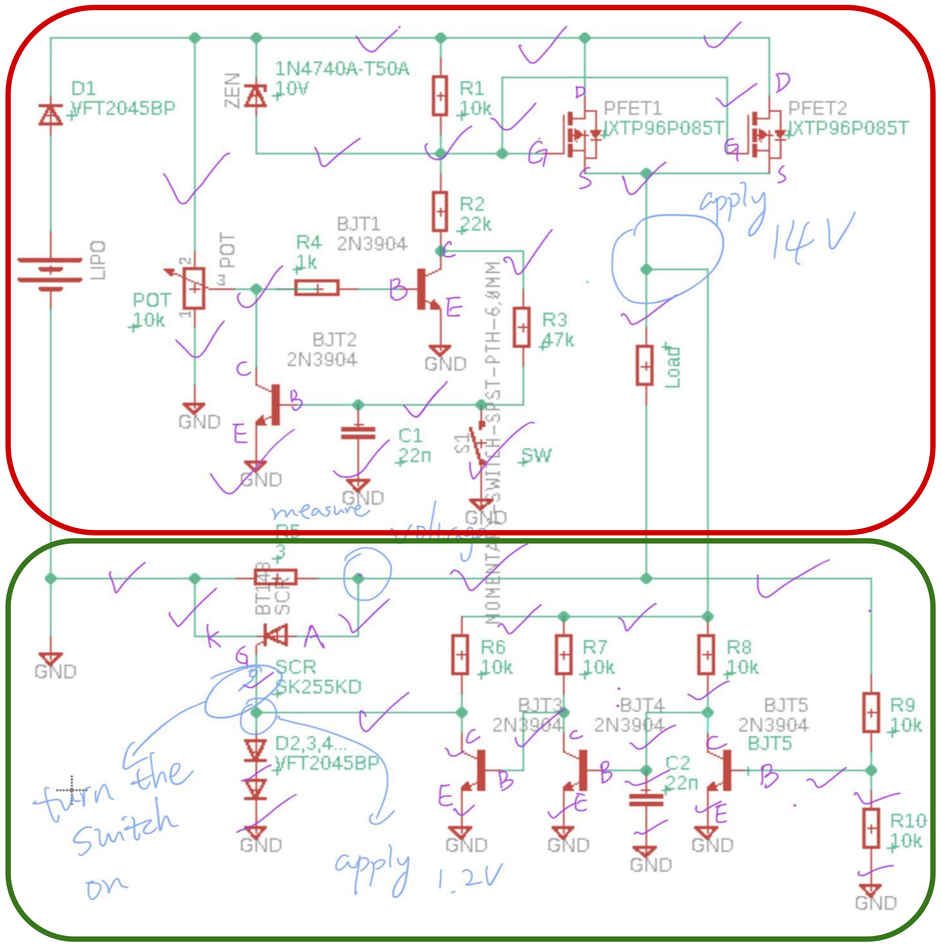

= Under/Overvolting Regulation
= In-Rush Current protection

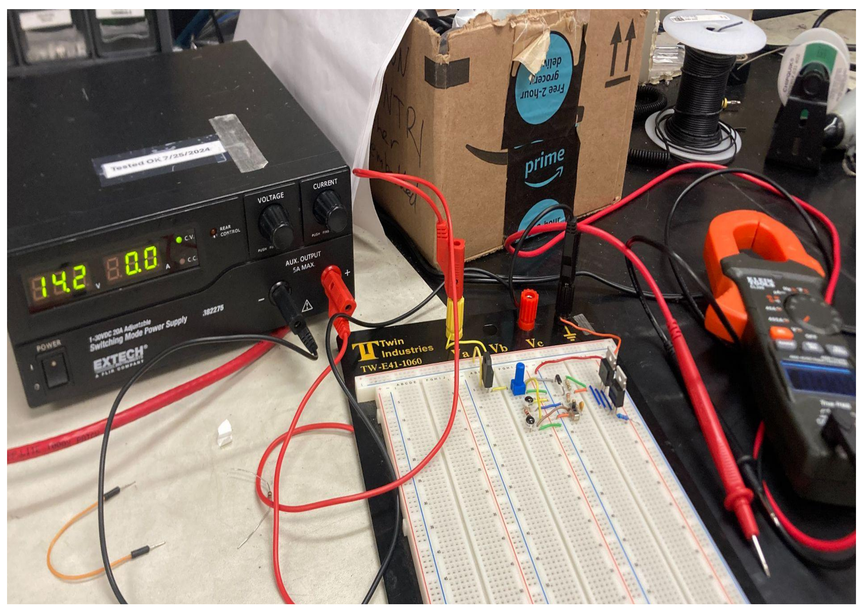

Testing subcircuit with power supply and multimeter at a voltage less than gate shut-off voltage (14.4V), this simulates what the leakage would be.

Undervolting and Overvolting: Undervolting is when the voltage supplied by the 4S-LIPO Batteries are below what is necessary for the circuit to function. Overvolting is when voltage supplied is above the necessary range.

In-Rush Current: Refers to a surge of current being drawn when a device is first turned on.

If these events are not controlled correctly, it can lead to damaged components!

Overview

As power board lead for BIRDS Lab's FastANT Robot Team, my goal is to design and build a safe, voltage and current regulating power board for the robot.

The power board schematic design is made up of two subcircuits; an undervolting and overvolting regulation circuit as well as a SCR timer circuit to prevent in-rush current.

This semester my focus has been creating a working breadboard prototype for the undervolting and overvolting protection subcircuit, that meets the desired specifications for powering the FastANT Robot.

Desired Specifications

The FastANT needs to safely use the 4S-LIPO batteries over a long period of time, this circuit therefore must have a current draw less than or equal to the maximum current draw (I_{MAX}) calculated on the left side.

Ideally, the gate of PFET1/PFET2 switches on when the voltage drops below 16.8V and off when at 14.4V.



Measured Current of Subcircuit Load Resistor using Ohm's Law:

where V_{LOAD}**= 3.195V,** and R_{LOAD}**= 560kΩ**

$I = V_{LOAD}/R_{LOAD}$

I_{LOAD} = 5.71mA, < I_{MAX}

Too high! Must make changes to circuit.

What's Next?

My next steps are are making design changes to the prototype so that the circuit draw to less than I_{MAX}. Potential changes include replacing the BJTs with FETs. I would also like to implement an LED that turns on when the circuit is not undervolting.